IDEAL WORKSTATION® 6 - SINGLE BOWL (IWS 6S)
COUNTERTOP CUTOUT & TAP SPECIFICATIONS

THE GALLEY® REINVENT YOUR KITCHEN

SPECIFICATIONS

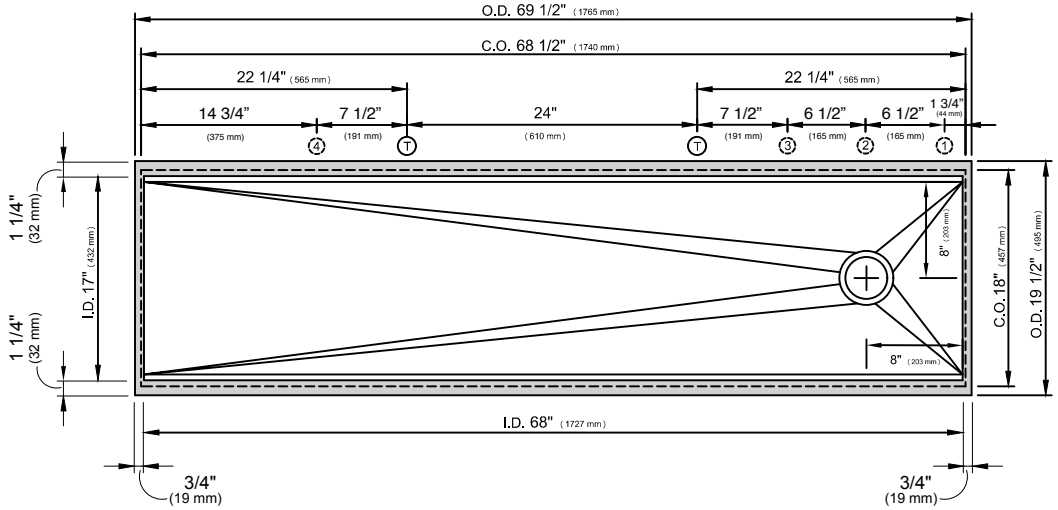

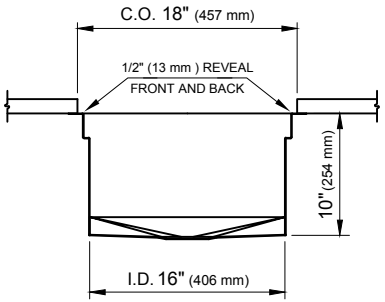

COUNTERTOP CUTOUT PLAN

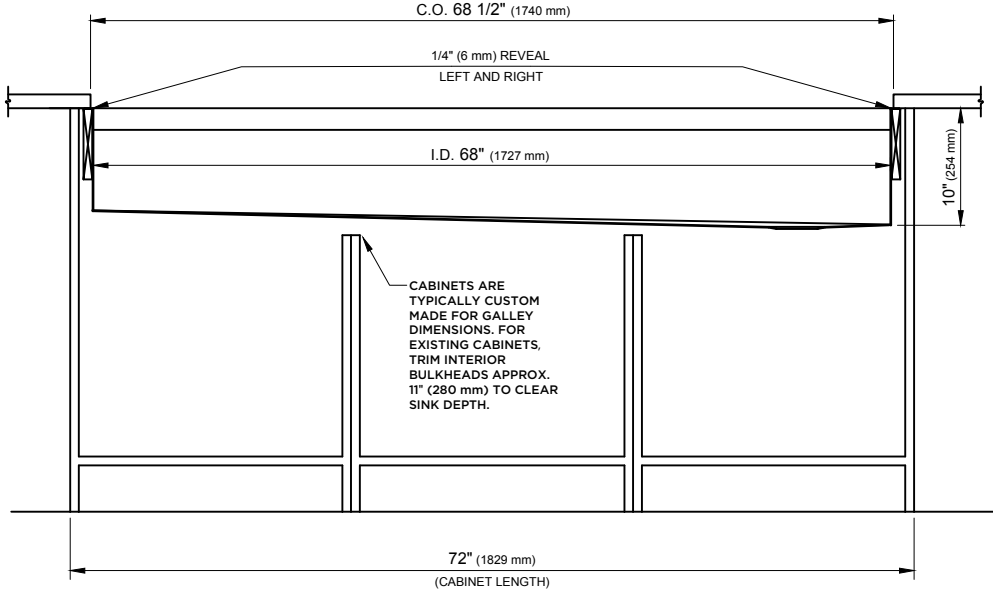

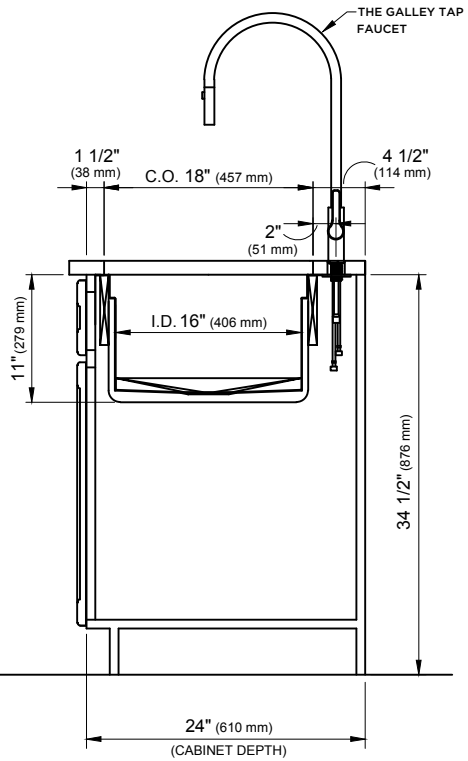

SUGGESTED GALLEY TAP AND TAP ACCESSORIES PLACEMENT GUIDE
(Recommendations are based on installing 3 or more Tap accessories)
Suggested maximum inside corner radius of countertop cutout 3/8"
Ⓣ Galley Tap 1 3/8" min hole diameter (1 1/2" min hole diameter for fast water jet cut)
① Galley Deck Switch 1 3/8" min hole diameter or Galley Automatic Strainer Basket knob 1" min and 1 3/8" max hole diameter
② Galley Hot & Cold Tap 1 3/8" min hole diameter (1 1/2" min hole diameter for fast water jet cut)
②③④ Galley Soap Dispenser 1" min hole diameter
Center Tap hole diameters 2" behind cutout
Note: Galley Hot & Cold Tap requires a minimum 8" clearance to center if installed to the right of the Galley Tap
Note: For installation where the drain is on the left side, simply reverse placements of Tap and Tap Accessories

STAINLESS STEEL COMPLIANCE ASME A112. 19.3-2008/CSA B45.4-08

WE RESERVE THE RIGHT TO MAKE REVISIONS WITHOUT NOTICE IN THE DESIGN OF PRODUCTS OR IN PACKAGING UNLESS THIS RIGHT HAS SPECIFICALLY BEEN WAIVED AT THE TIME THE ORDER IS ACCEPTED.

DWG and DXF templates available on our website:
TheGalley.com/specifications

Questions? For additional assistance, please contact The Galley's Customer Service Department at 800.375.4255